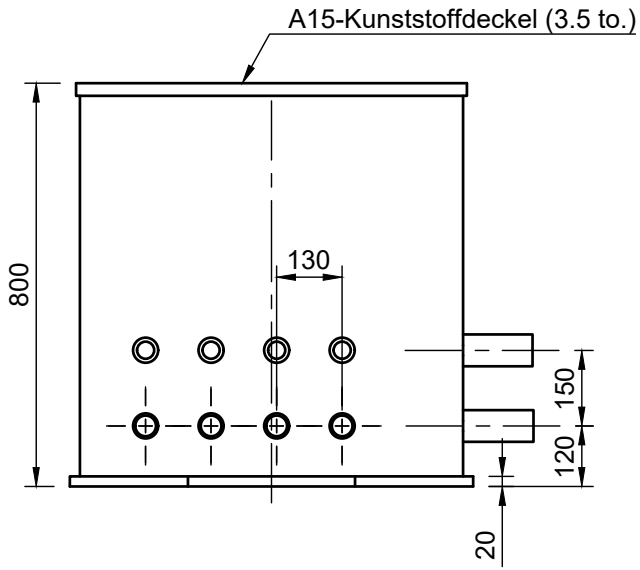

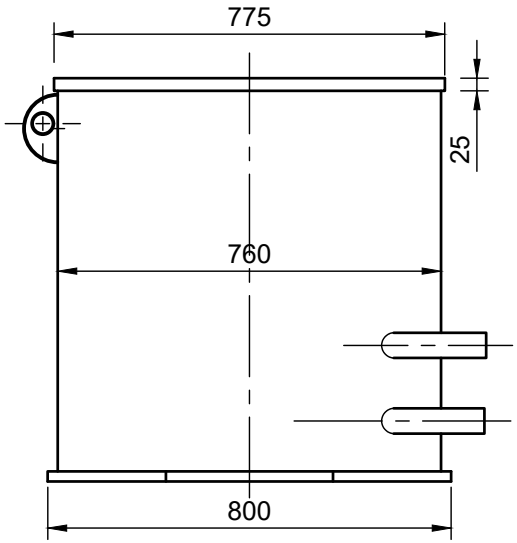

ECO 730
2 bis 8-fach

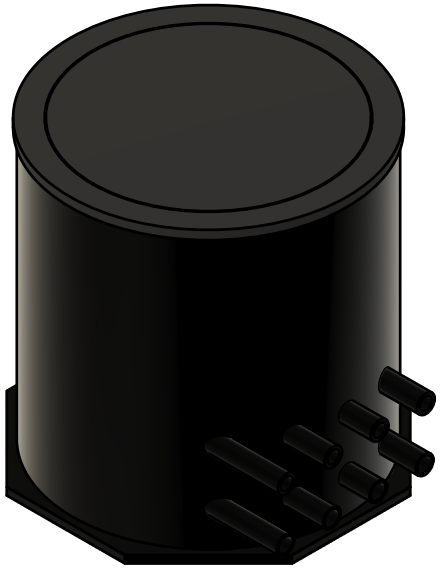

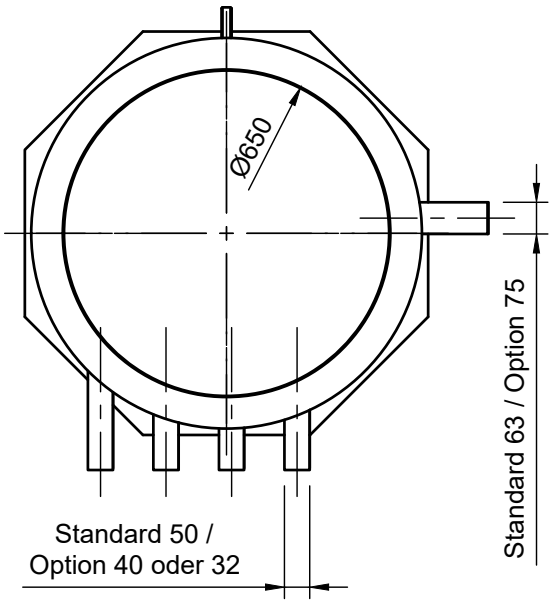

Dept.	Technical reference	Created by	Approved by
algeo		DA 13.11.2025	
		Document type	Document status
		Title	DWG No.
		algeo ECO 730 Verteilerschacht STANDARD	202511_00240
			Rev. / Date of issue 13.11.2025 / Sheet 1/1

algeo
Geothermal Pioneers